SALES DRAWING SALES DRAWING SALES DRAWING

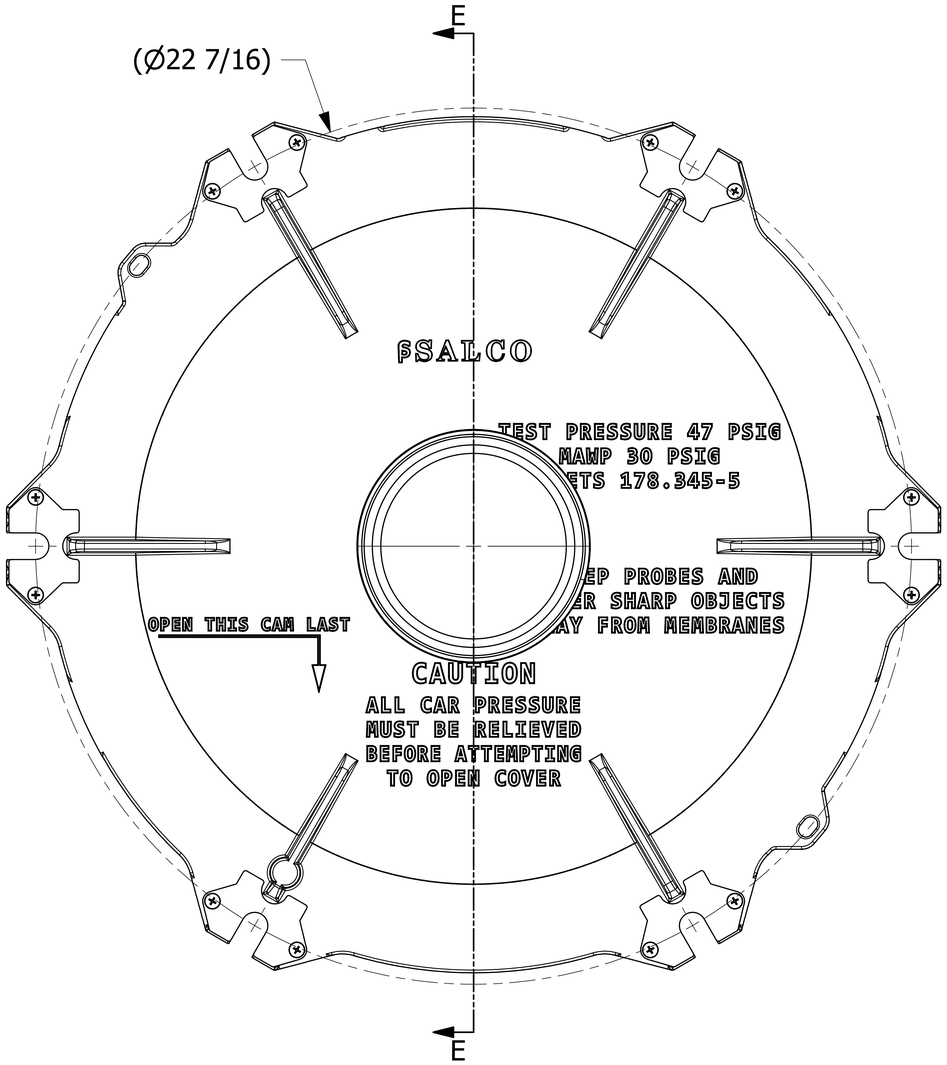

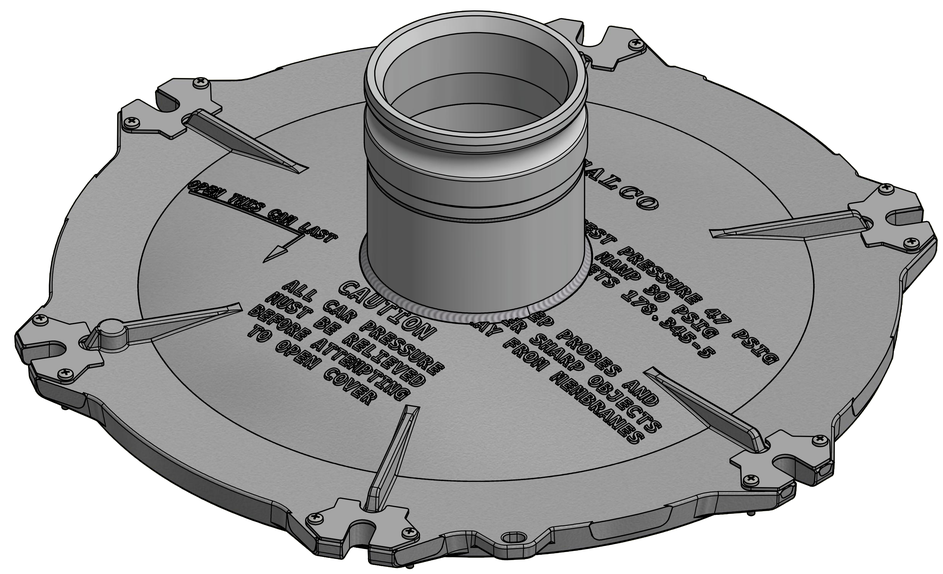

ISOMETRIC VIEW

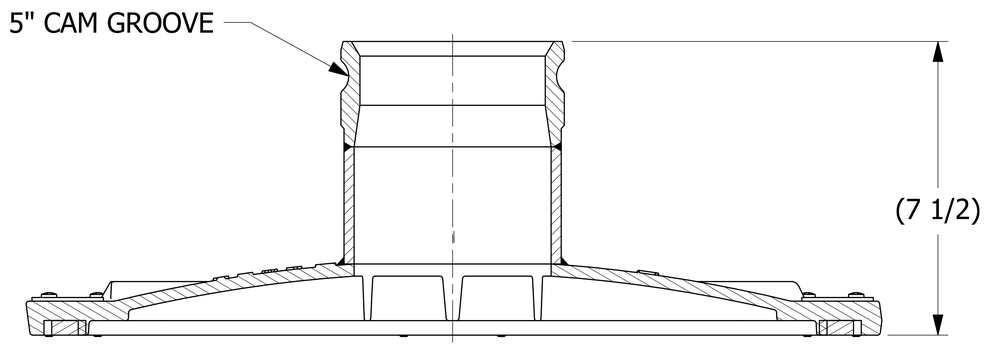

SECTION E-E

REV	BY	DATE	REF #	
D	RS	3/28/23	202303280953	RS
				PUB

UNLESS OTHERWISE SPECIFIED DIMENSIONAL TOLERANCES

FRACTIONAL: ±1/16
X.XX: ±.03
X.XXX: ±.015
ANGULAR: ±1°

DEBURR ALL SHARP EDGES. ALL MACHINED SURFACES TO HAVE A 125 RMS FINISH UNLESS NOTED OTHERWISE.

THIRD ANGLE PROJECTION

DRAWN BY:	CHL
CHECKED BY:	PJG
PROTOTYPE DATE:	11/6/2009
APPROVED FOR PRODUCTION BY:	CHL
PRODUCTION DATE:	5/14/2010
SIZE:	E
DRAWING #:	27716

SALCO PRODUCTS, INC.

PART NAME: LOADING COVER 20"

MATERIAL: SEE BOM

PROJECT #: WAG0744 | SHEET #: 1 OF 1 | SCALE: 2:3

PART #: LC2050MKPD

THIS PRINT, PROPERTY OF SALCO PRODUCTS INC, CONTAINS PROPRIETARY INFORMATION AND MUST NOT BE COPIED, REPRODUCED, OR USED DETRIMENTALLY TO OUR INTEREST.